PHOENIX
THE RETAIL BRAND

TECHNICAL DATA SHEET

Range:	Fitted Furniture
Type:	Basin
Code:	VB530 for F001
Version/Date:	v1 11/24

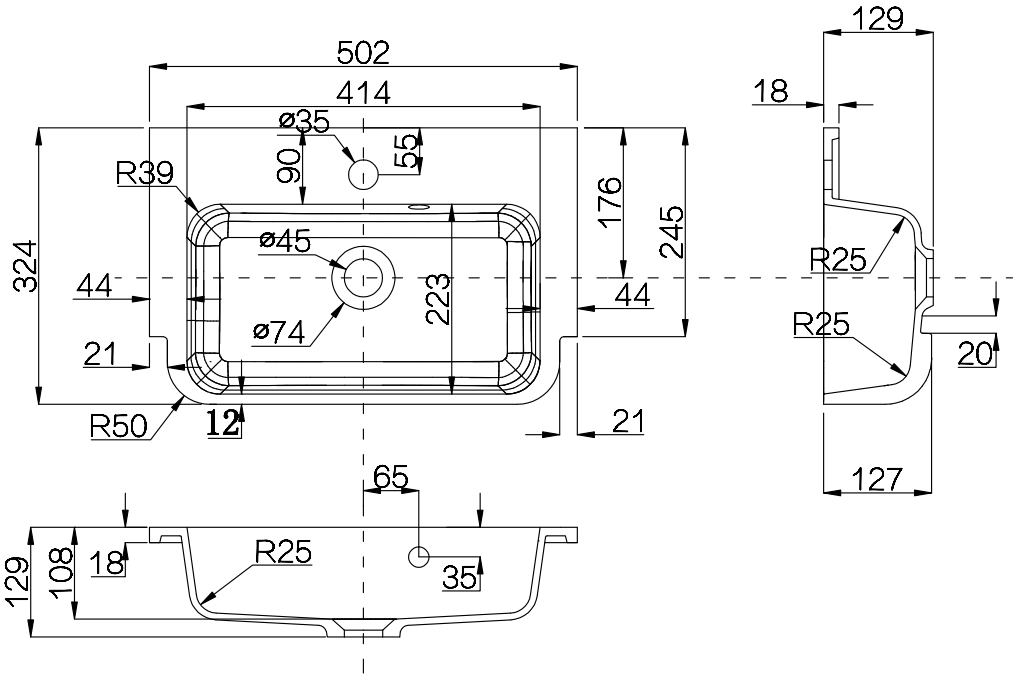

Guarantee/Aftercare: During installation extra care must be taken to avoid damaging the fittings. We provide a guarantee against faulty manufacture or materials (excluding serviceable parts), providing they have been installed, cared for and used in accordance with our instructions and good plumbing practice.

Unit Colour:

Gloss White

Phoenix Whirlpools Ltd. Unit 8, Leeds 27 Industrial Estate, Bruntcliffe Ave. Morley, Leeds LS27 0LL
Tel: 0113 201 2260 Email: sales@phoenix-uk.com Web: www.phoenix-uk.com

Notes: Drawings may not be to scale. All dimensions in mm unless otherwise stated. Information correct at time of printing but subject to change at any time.